1) Manual Nailing Bench for 2/4 way pallet from 700 to 2000 mm. With open/close motorize. Pneumatic Extraction include. Manual inclination to slide the pallet into the stacker.

3) Automatic stock with motorize conveyor for deposit up to 3 stock pallet.

2) Automatic stacker for simple stock pallet. Up to 5 pz for minute. Stock up to 2700mm

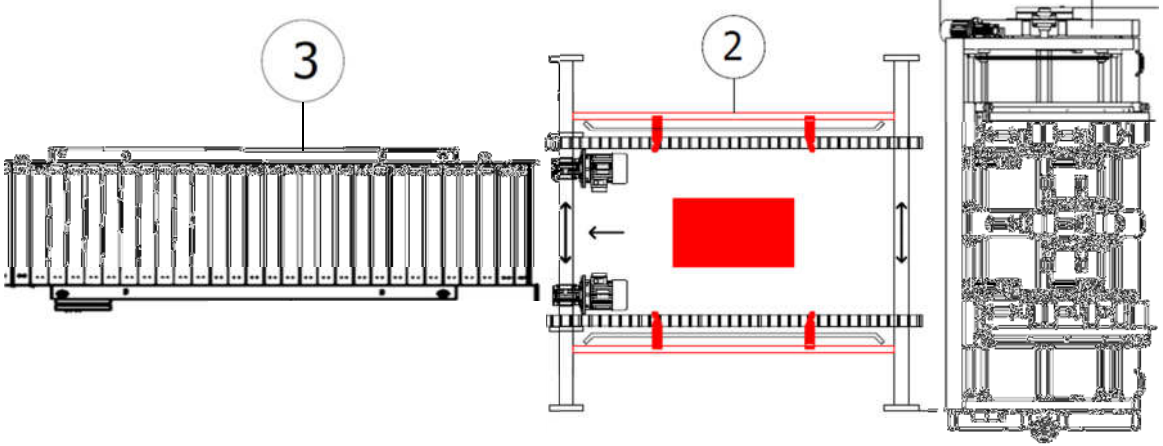

OPERATOR ZONE

The operator loading material in the bench. After assembly pallet with guns. When finish make the pallet in the stacker. In automatic stacker complete the stock.